DRUM
14.7742.10

The 14.7742.10 drum is synonymous with reliability

Brembo has developed several design solutions for drum brakes which combine multiple materials to reduce the overall weight. The most popular range of lamellar graphite cast iron drums is supplemented by cast iron drums with a steel sprocket flange and aluminium drums, whereby only the inner part of the drum on which the shoes operate are made of lamellar cast iron, namely the brake band. Additionally drums with built-in bearing kit and hub are added to this range.

- OE-equivalent
- Brembo quality
- Safety
- Durability

Technical specifications

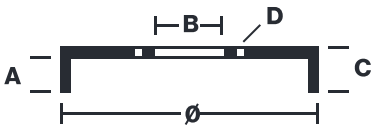

EAN code 8020584774212	Axle Rear	Diameter 254 mm
Width 67 mm	Height 75	Number of holes 5
Centering 68 mm	Max diameter 255,5 mm	

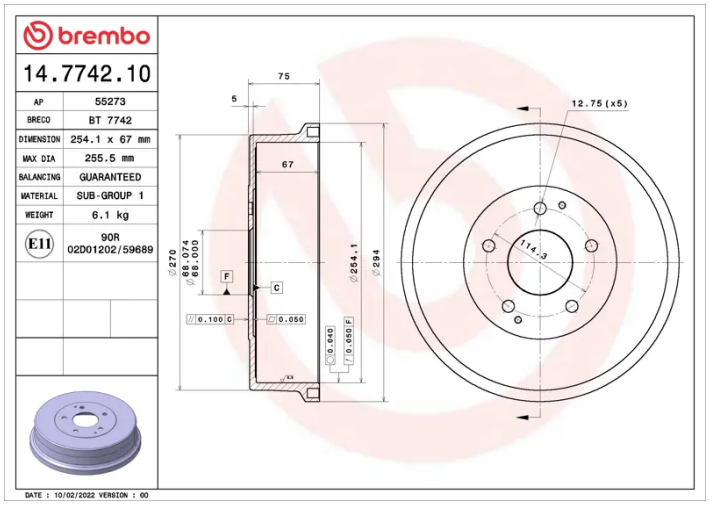

COMPATIBLE VEHICLES

COMPATIBLE OE PART NUMBERS

432069C502	NISSAN