BRAKE PAD
P 23 124

The P 23 124 brake pad is synonymous with reliability

The Brembo brake pad guarantees ultimate safety when braking thanks to the use of more than 100 different compounds, designed according to the type of vehicle and use. Stopping distances reduced to a minimum, maximum driving comfort and silent operation are the most important features of Brembo materials. Brembo brake pads are supplied together with an extensive range of accessories and assembly kits for professional-standard installation.

- OE-equivalent
- Brembo quality
- ECE-R90 certificate
- Safety
- Performance
- Comfort

Technical specifications

EAN code 8020584060377	Axle Front	Thickness 18 mm
Width 151 mm	Height 49 mm	Braking system Teves
Wear indicator Without	WVA number 23218,23219	Accessories With anti-squeal shim

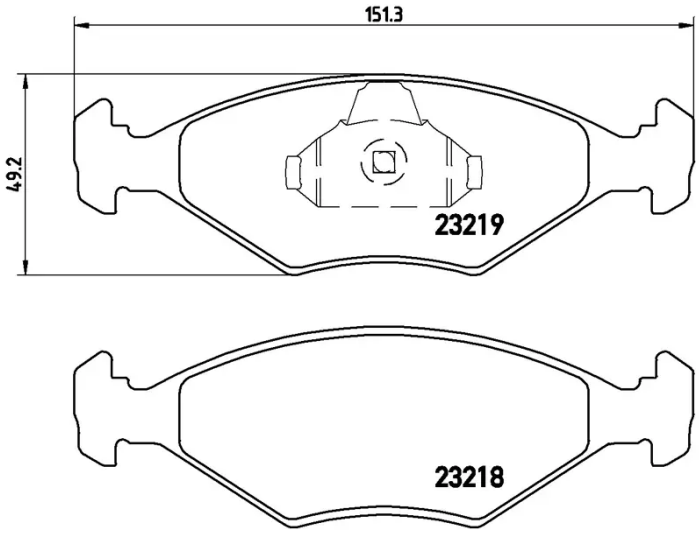

COMPATIBLE VEHICLES

COMPATIBLE OE PART NUMBERS

7078947	FIAT
9947917	FIAT