GP4-RB 220B47330

The 220B47330 caliper is synonymous with reliability

The iconic carved from a billet in two pieces is now also available with an anodised black finish to enhance the technical performance and appearance of the motorbike.

- OE-equivalent
- Brembo quality
- TUV approved
- Safety
- Performance
- Exclusive style
- Sports driving

Technical specifications

Piston size **30-34** mm	Number of pistons **4**	Surface width **32-34** mm
Offset **30** mm	Pads included **Yes**	Caliper material **Aluminium**
Protection **Black**	Piston material **Aluminium**	Weight without pads **780** gr
Units per box **2**		

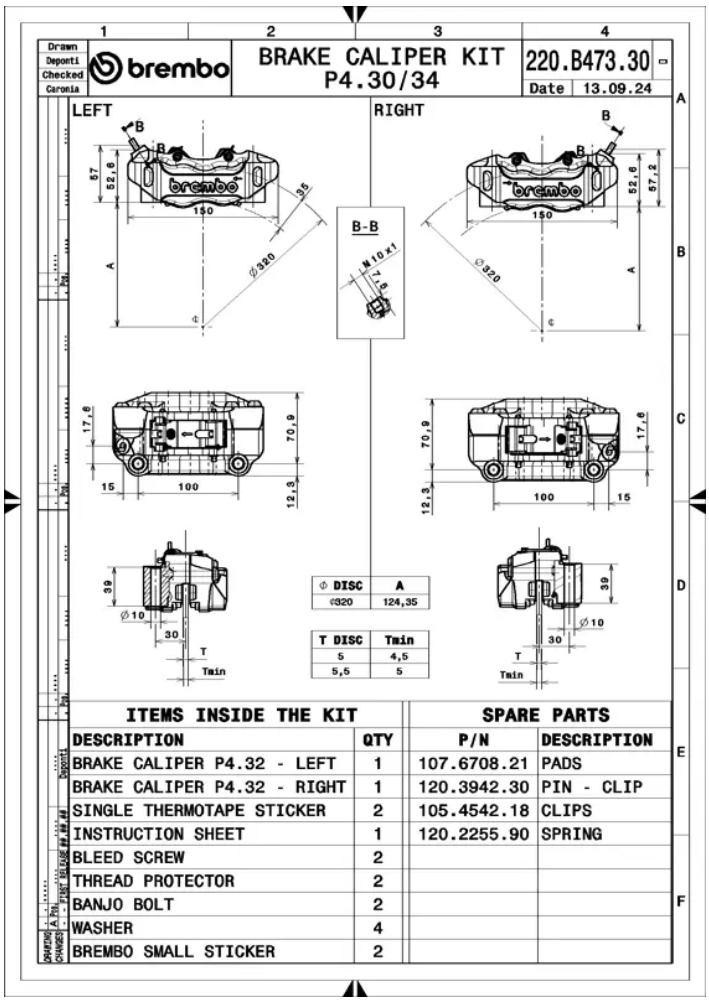

COMPATIBLE VEHICLES