BRAKE DISC
08.5645.50

The 08.5645.50 brake disc is synonymous with reliability

The Brembo brake disc is fully interchangeable with an Original Equipment brake disc. The control of the entire production cycle allows Brembo to offer brake discs with outstanding performance levels, reliability, durability and comfort in all conditions of use. All Brembo brake discs are accompanied by the ECE-R90 homologation.

- OE-equivalent
- Brembo quality
- ECE-R90 certificate
- Safety
- Fastening screws

Technical specifications

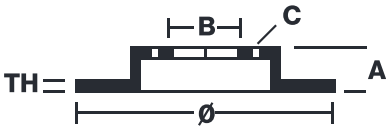

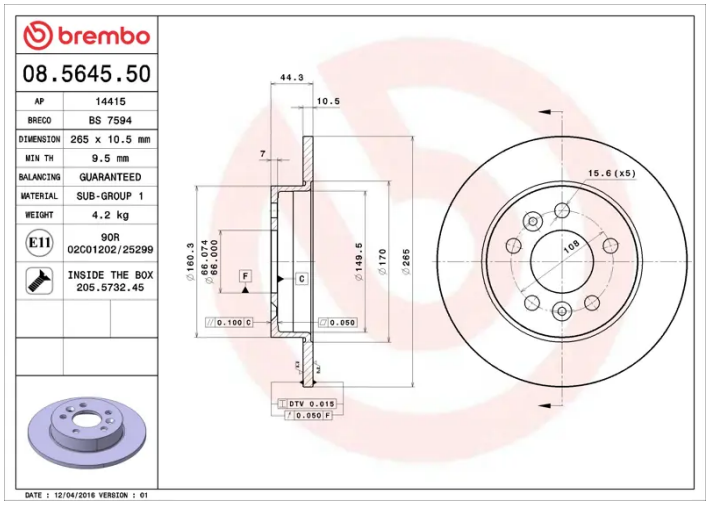

EAN code 8020584564554	Diameter Ø 265 mm	
Thickness (TH) 10,5 mm	Height (A) 44 mm	Number of holes (C) 5
Brake disc type Solid	Centering (B) 66 mm	Min. thickness 9,5 mm
Tightening torque 110 Nm		

COMPATIBLE VEHICLES

COMPATIBLE OE PART NUMBERS

7700800003	RENAULT
7701204296	RENAULT
7701205845	RENAULT