BRAKE DISC MAX
09.7292.77

The 09.7292.77 Max brake disc is synonymous with reliability

The Brembo Max brake disc features grooves on the braking surface. The special shape of the grooves generates greater fading resistance and constant renewal of friction material, quickly restoring optimum braking conditions. The UV paint completes the sporty look.

- Brembo quality
- ECE-R90 certificate
- Performance
- Sports driving
- Sporty look
- Anti-corrosion
- Fastening screws

Technical specifications

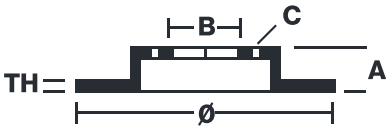
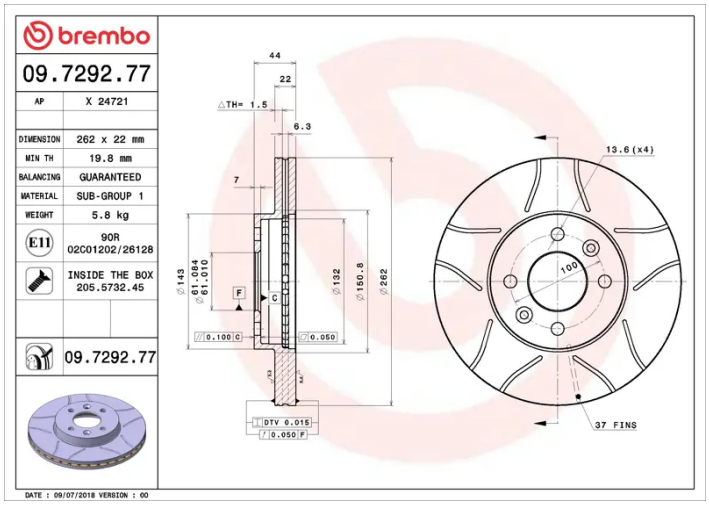
EAN code 8020584011843	Diameter Ø 262 mm	
Thickness (TH) 22 mm	Height (A) 44 mm	Number of holes (C) 4
Brake disc type Ventilated	Centering (B) 61 mm	Min. thickness 19,8 mm
Tightening torque 110 Nm