BRAKE DISC PAINTED
09.B570.11

The 09.B570.11 painted brake disc is synonymous with reliability

The Brembo brake disc with special UV paint treatment guarantees superior corrosion resistance for the product, thanks to the protective coating on the outer edges and on the disc hub. The UV paint not only gives the disc a clean, shiny appearance but is also beneficial for the environment as the water-based UV paint treatment does not require the use of chemical solvents and is a low energy consumption process.

- OE-equivalent
- Brembo quality
- ECE-R90 certificate
- Safety
- High carbon
- Anti-corrosion
- Fastening screws

Technical specifications

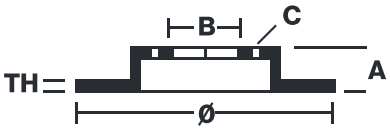

EAN code
8020584039496

Diameter Ø
328 mm

Thickness (TH)
28 mm

Height (A)
73 mm

Number of holes (C)
5

Brake disc type
Ventilated

Centering (B)
75 mm

Min. thickness
26,4 mm

Tightening torque
140 Nm

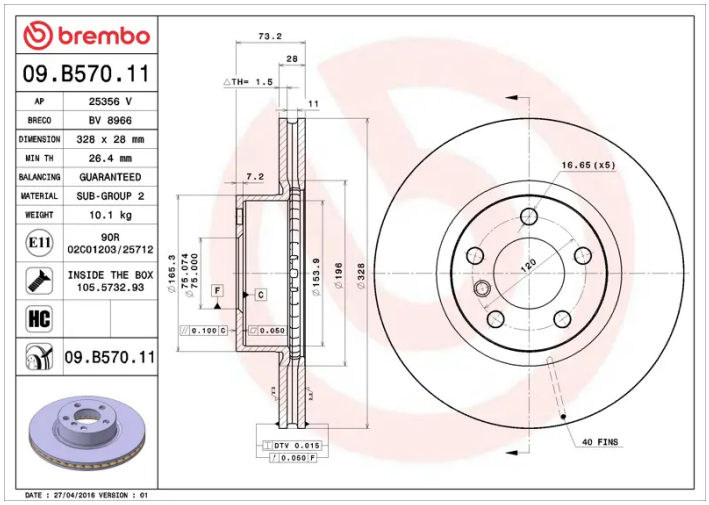

COMPATIBLE VEHICLES

COMPATIBLE OE PART NUMBERS

34106787490	BMW
34106879122	BMW