BRAKE PAD
P 79 007

The P 79 007 brake pad is synonymous with reliability

The Brembo brake pad guarantees ultimate safety when braking thanks to the use of more than 100 different compounds, designed according to the type of vehicle and use. Stopping distances reduced to a minimum, maximum driving comfort and silent operation are the most important features of Brembo materials. Brembo brake pads are supplied together with an extensive range of accessories and assembly kits for professional-standard installation.

- OE-equivalent
- Brembo quality
- ECE-R90 certificate
- Safety
- Performance
- Comfort

Technical specifications

EAN code 8020584057278	Axle Front and rear	Thickness 14 mm
Width 99 mm	Height 62 mm	Braking system Lucas
Wear indicator Without	WVA number 24663	Accessories With anti-squeal shim

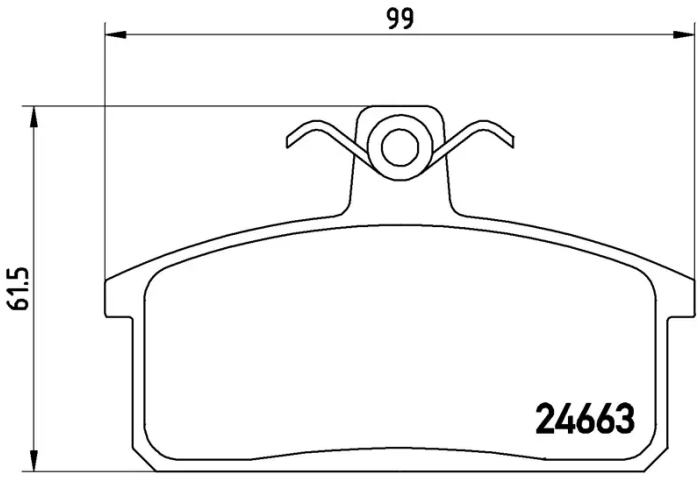

COMPATIBLE VEHICLES

COMPATIBLE OE PART NUMBERS

500028834	IVECO
00000A01225	SANTANA
00000A00154	SUZUKI
00000A00906	SUZUKI
00000A01225	SUZUKI
00000A0906B00	SUZUKI